SH20865A (208 DOTS X 65 DOTS)

■ FEATURES

- ◆ BUILT-IN CONTROLLER (IST3017)
- ◆ +3.0 V POWER SUPPLY
- ◆ 1/80 DUTY CYCLE
- ◆ 8-BIT PARALLEL INTERFACE

■ MECHANICAL DATA

ITEM	DIMENSIONS	UNIT
Module Size (W x H x T)	67.0 x 30.0 x 2.0	mm
Viewing Area (W x H)	60.425 x 20.385	mm
Active Area (W x H)	58.225 x 18.185	mm
Dot Size (W x H)	0.265x 0265	mm
Dot Pitch (W x H)	0.28 x 0.28	mm

■ INTERFACE PIN CONNECTIONS

NO.	SYMBOL	LEVEL	FUNCTION
1	V_{DD}	3V	Power Supply Voltage
2	/RD	L	Read Signal
3	/WR	L	Write Signal
4	/CS1	L	Chip Signal
5	V_{SS}	0V	Power Supply Ground
6	A_o	H/L	Data Type Select
7~14	DB0~DB7	H/L	Data Bus Line
15	/RES	H/L	Reset Signal

■ ABSOLUTE MAXIMUM RATINGS

ITEM	SYMBOL	MIN.	TYP.	MAX.	UNIT
Supply Voltage For Logic	V_{DD}-V_{SS}	0	-	6	V
Supply Voltage For LCD Drive	V_{DD}-V_o	0	-	20	V
Input Voltage	V_I	Vss	-	V_{DD}	V

■ ELECTRICAL CHARACTERISTICS

ITEM		SYMBOL	CONDITION	MIN.	TYP.	MAX.	UNIT
Supply Voltage For Logic		V_{DD}-V_{SS}	-	2.4	3	3.6	V
LCD Supply Voltage		V_{DD}-V_o	V_{DD}=3V Ta=25℃	8.7	9	9.3	V
Supply Current		I_{DD}	V_{DD}=3V	-	16	25	mA
Input Voltage	"HIGH" Level	V_{IH}	-	2.2	-	VDD	V
	"LOW" Level	V_{IL}	-	-	-	0.6	V
Output Voltage	"HIGH" Level	V_{OH}	-	2.4	-	-	V
	"LOW" Level	V_{OL}	-	-	-	0.4	V
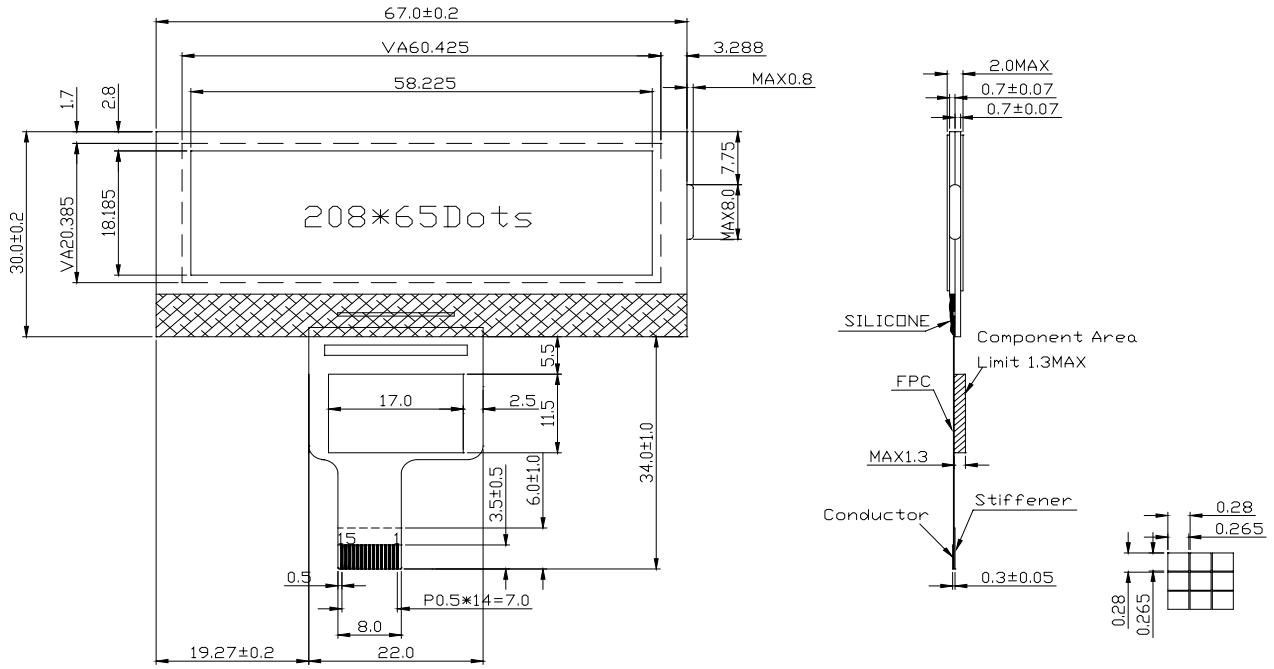
■ EXTERNAL DIMENSIONS